Power

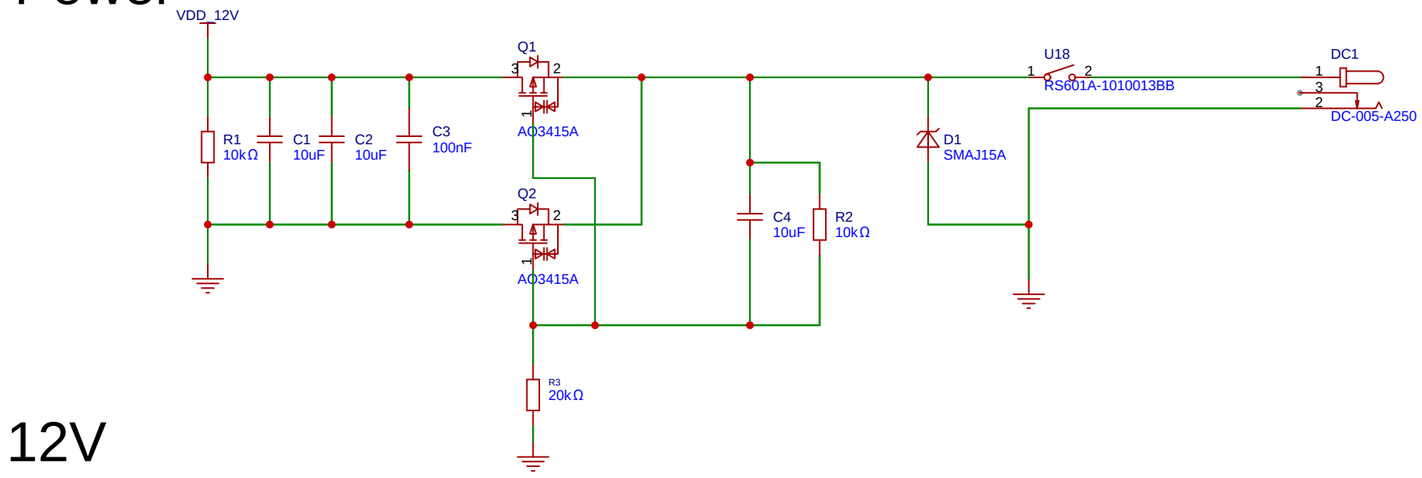

12V

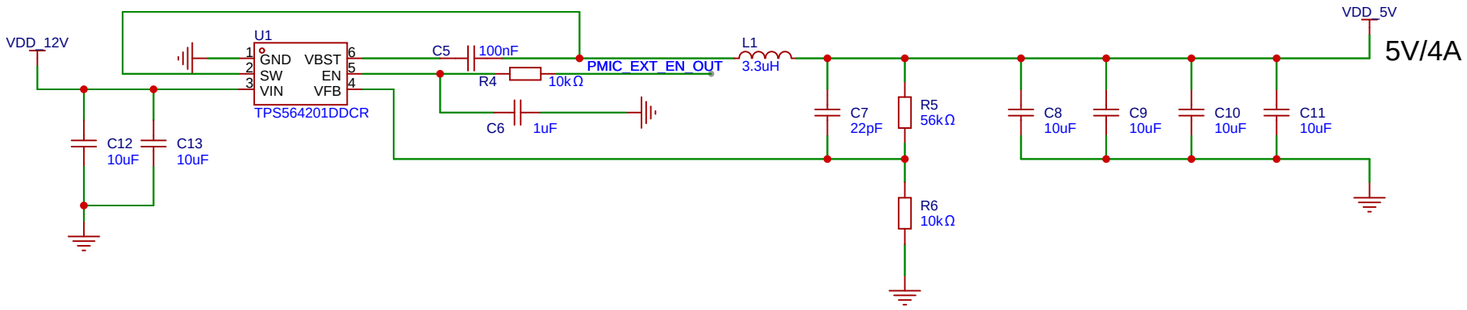

12V-5V

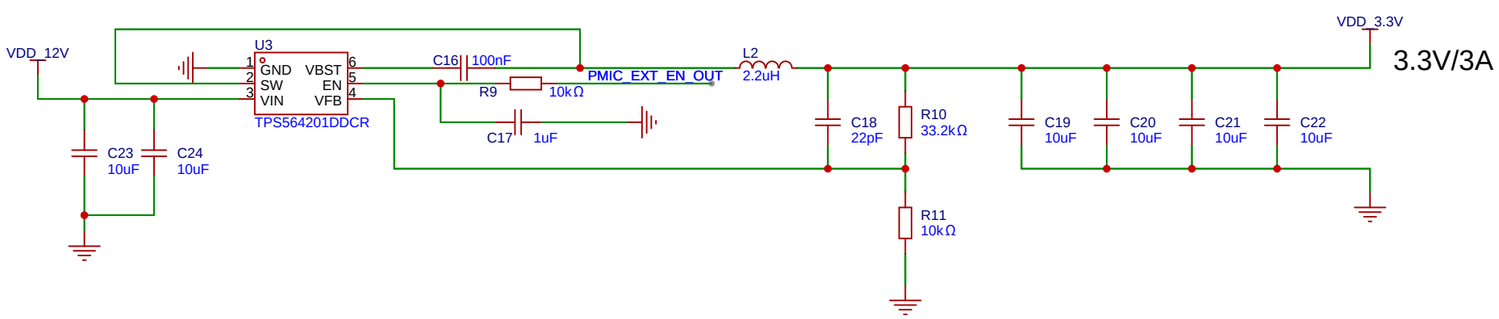

12V-3.3V

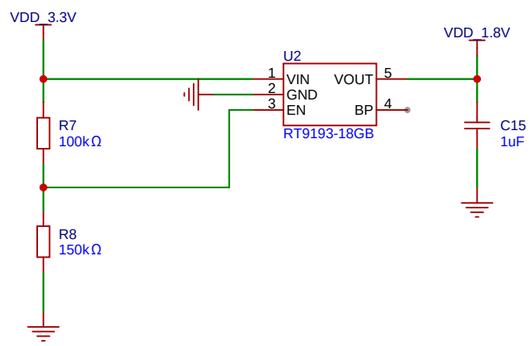

3.3V-1.8V

RK3588miniPC

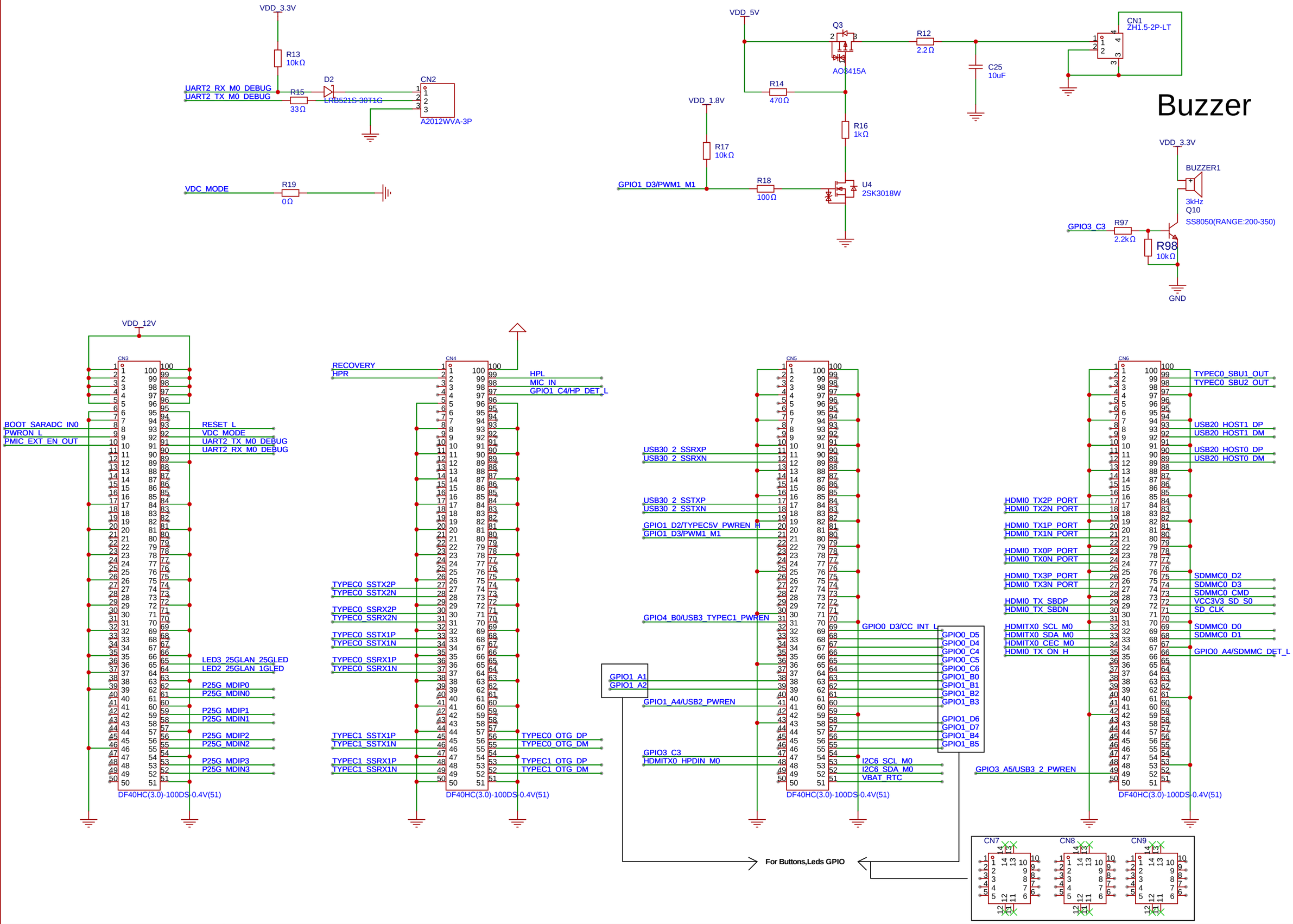

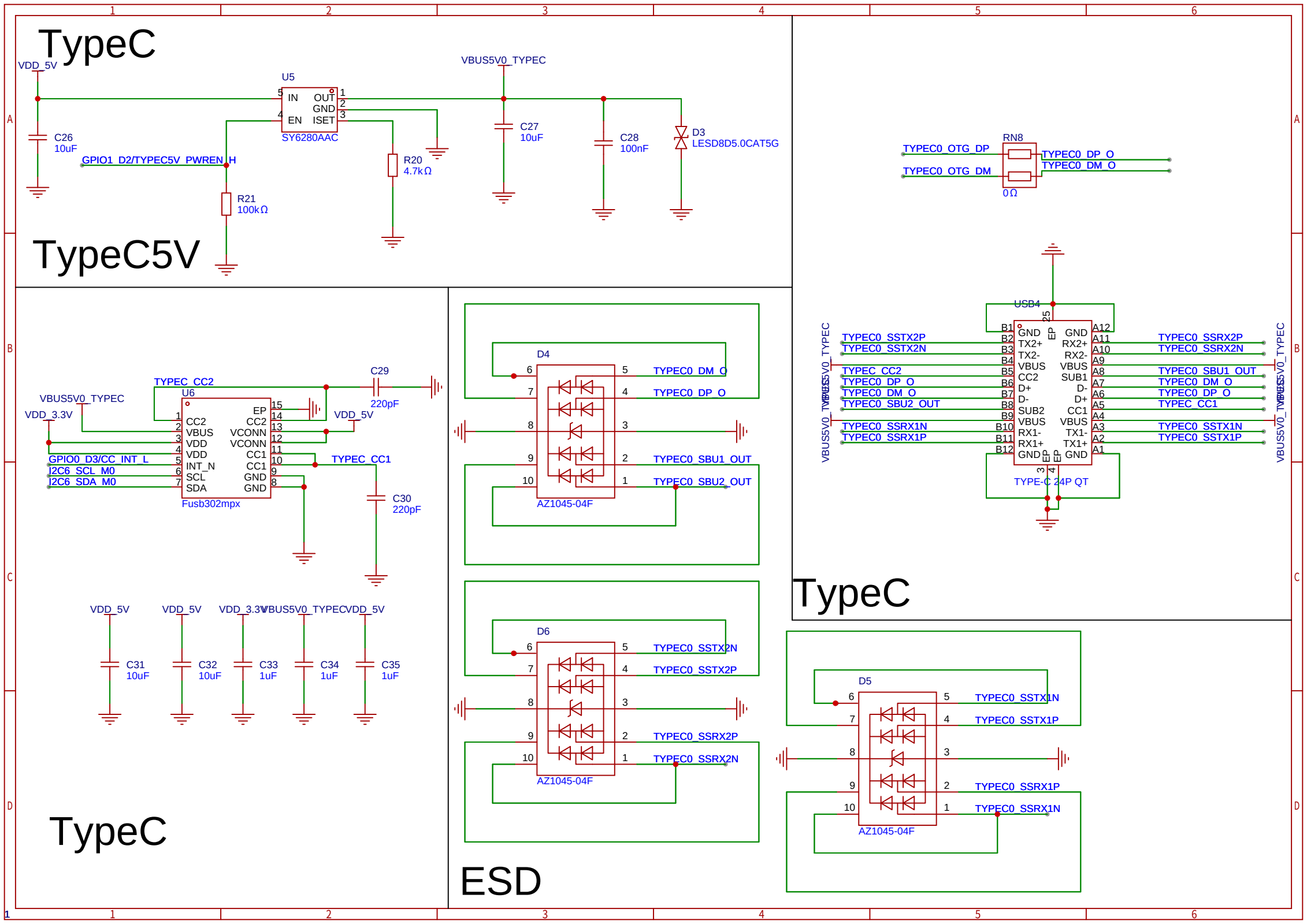
TypeC
VDD_5V
U5
IN
OUT
GND
EN
ISET
SY6280AAC
VBUS5V0_TYPEC
C26
10uF
GPIO1_D2/TYPEC5V_PWREN_H
R21
100kΩ
R20
4.7kΩ
C27
10uF
C28
100nF
D3
LESD8D5.0CAT5G
TypeC5V
RN8
TYPEC0_OTG_DP
TYPEC0_OTG_DM
TYPEC0_DP_O
TYPEC0_DM_O
0Ω
USB4
TYPEC0_SSTX2P
TYPEC0_SSTX2N
TYPEC_CC2
TYPEC0_DP_O
TYPEC0_DM_O
TYPEC0_SBU2_OUT
TYPEC0_SSRX1N
TYPEC0_SSRX1P
TYPEC0_SSRX2P
TYPEC0_SSRX2N
TYPEC0_SBU1_OUT
TYPEC0_DM_O
TYPEC0_DP_O
TYPEC_CC1
TYPEC0_SSTX1N
TYPEC0_SSTX1P
TYPE-C 24P QT
TypeC
C29
220pF
VBUS5V0_TYPEC
VDD_3.3V
U6
CC2
VBUS
VDD
VDD
INT_N
SCL
SDA
EP
CC2
VCONN
VCONN
CC1
CC1
GND
GND
VDD_5V
GPIO0_D3/CC_INT_L
I2C6_SCL_M0
I2C6_SDA_M0
TYPEC_CC1
C30
220pF
Fusb302mpx
VDD_5V
VDD_5V
VDD_3.3V
VBUS5V0_TYPEC
VDD_5V
C31
10uF
C32
10uF
C33
1uF
C34
1uF
C35
1uF
TypeC
D4
TYPEC0_DM_O
TYPEC0_DP_O
TYPEC0_SBU1_OUT
TYPEC0_SBU2_OUT
AZ1045-04F
D6
TYPEC0_SSTX2N
TYPEC0_SSTX2P
TYPEC0_SSRX2P
TYPEC0_SSRX2N
AZ1045-04F
D5
TYPEC0_SSTX1N
TYPEC0_SSTX1P
TYPEC0_SSRX1P
TYPEC0_SSRX1N
AZ1045-04F
ESD

HDMI

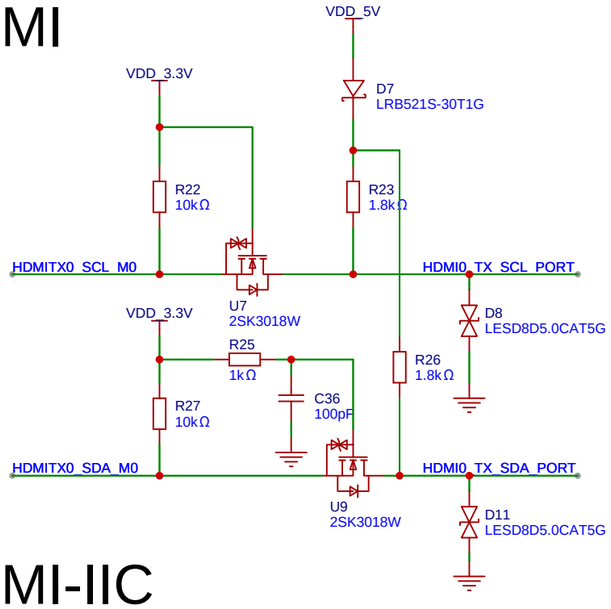

HDMI-IIC

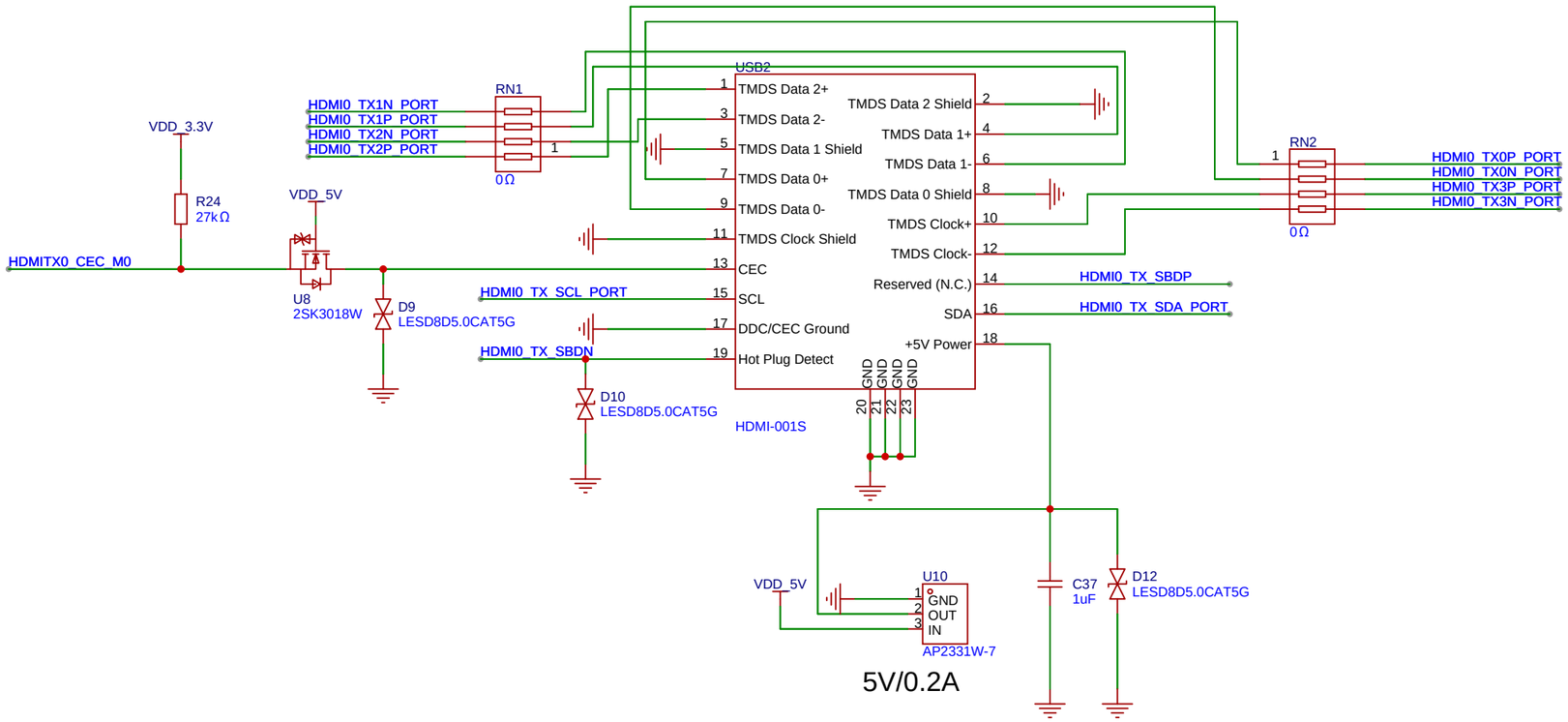

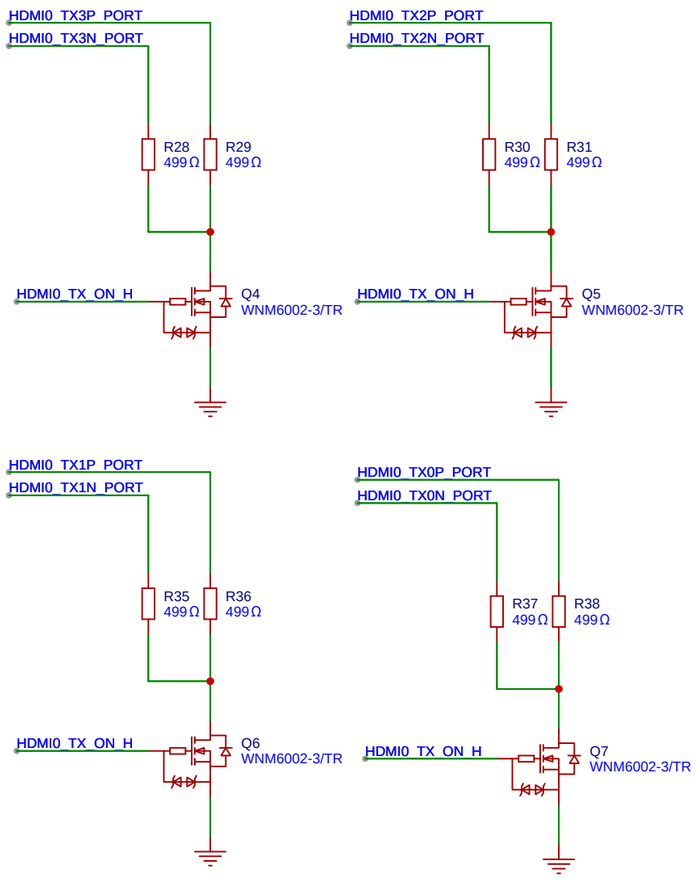

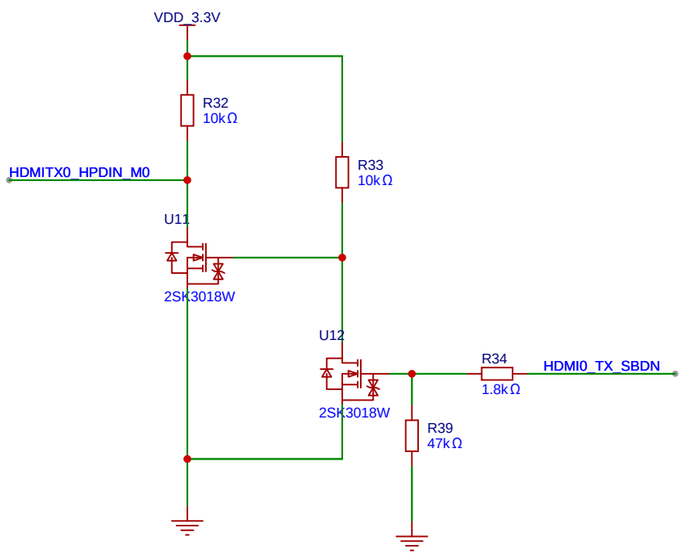

HDMI-HPD

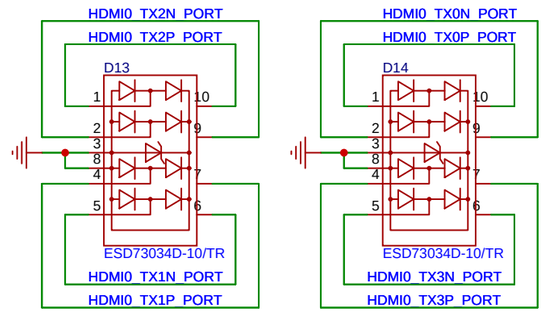

HDMI-ESD

Battery-Button

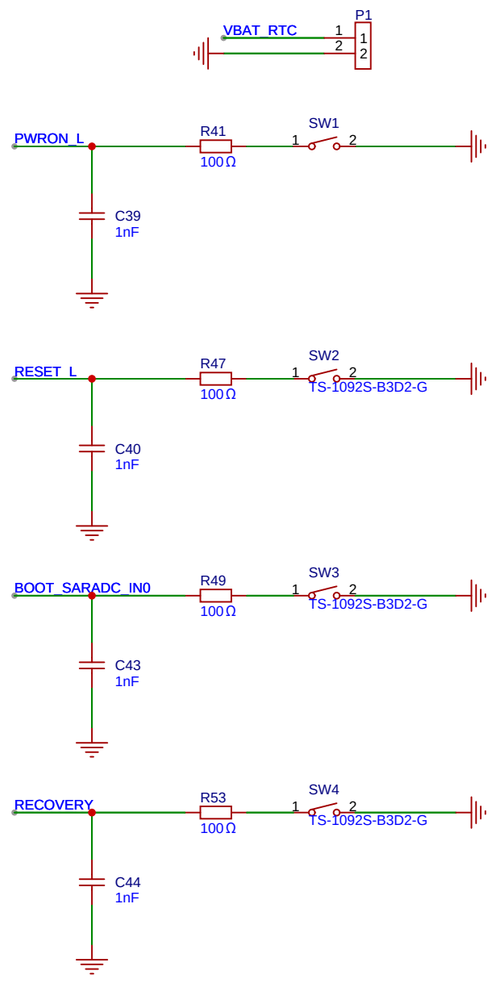

SDCARD

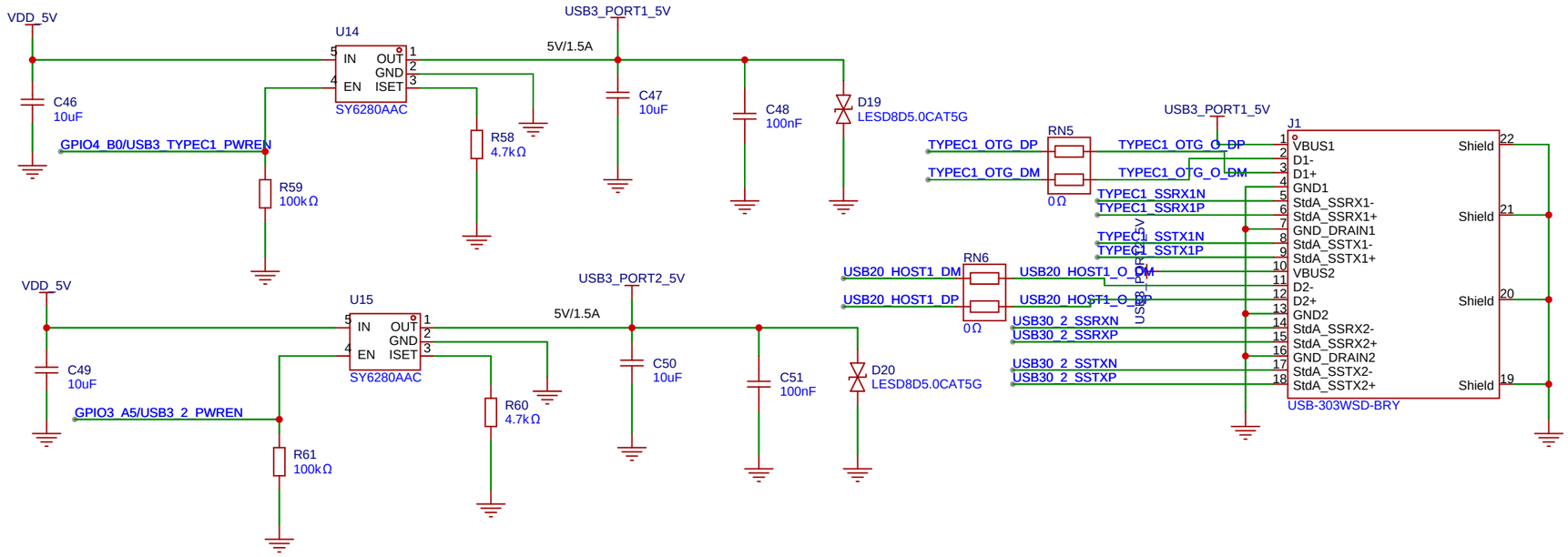

USB5V

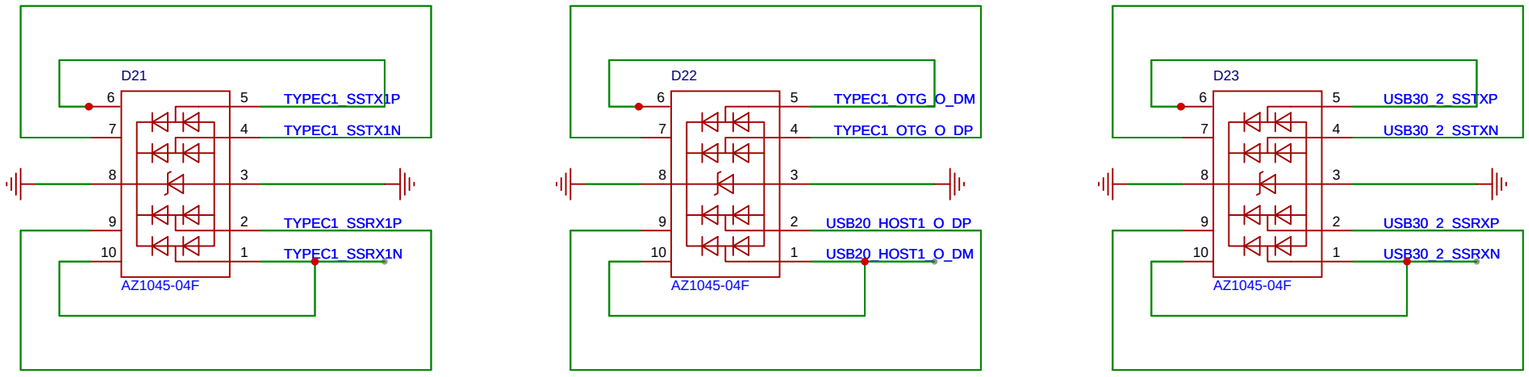

MicroSD

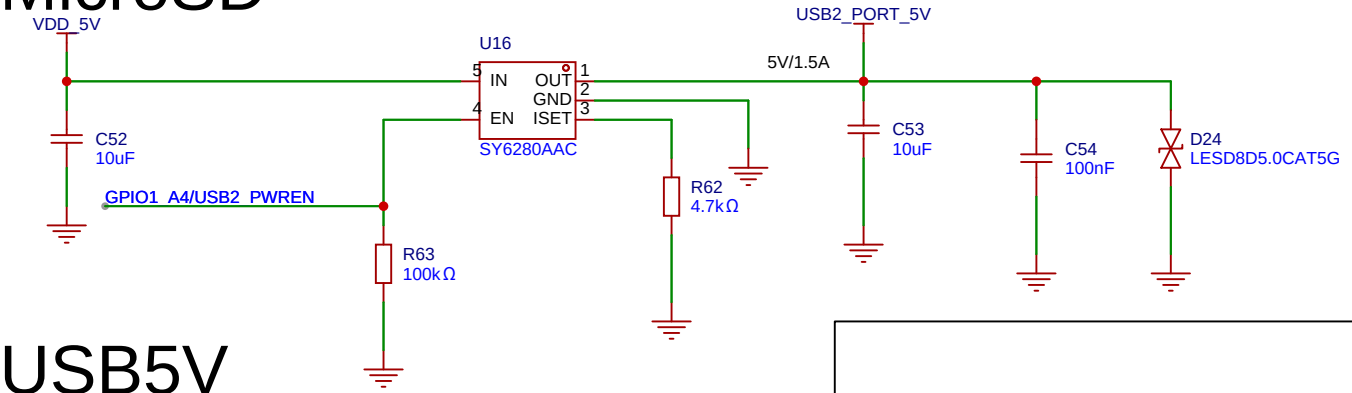

USB5V

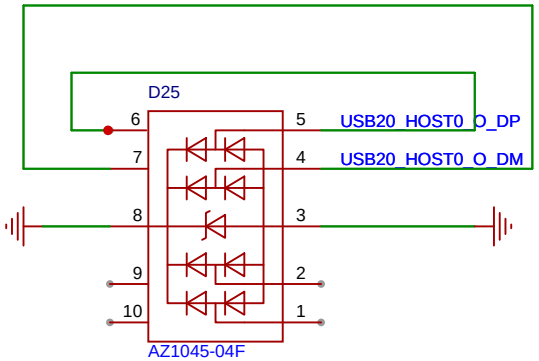

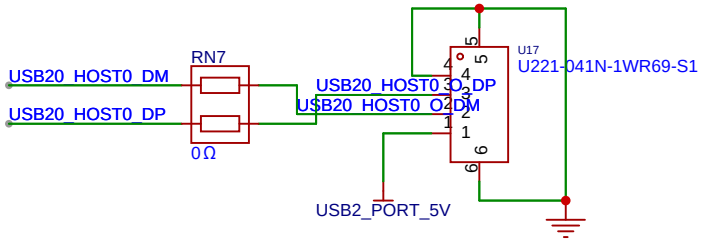

USB2.0

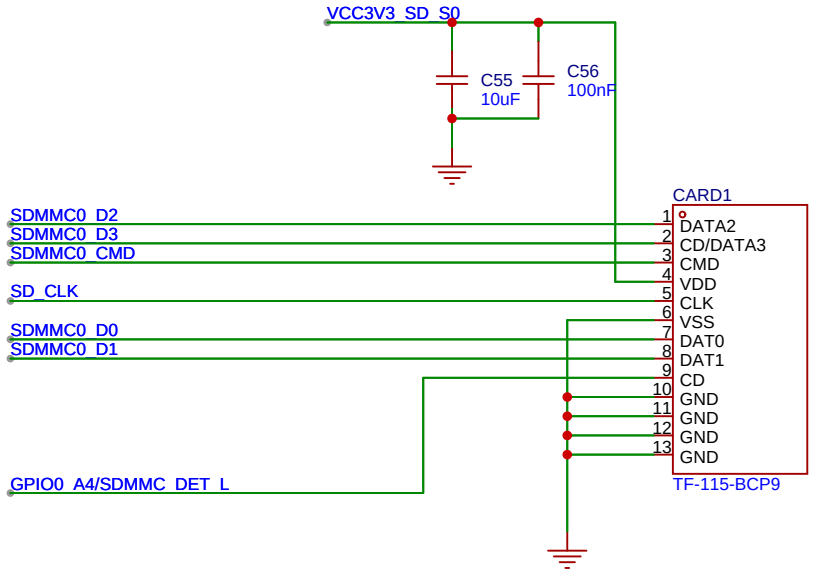

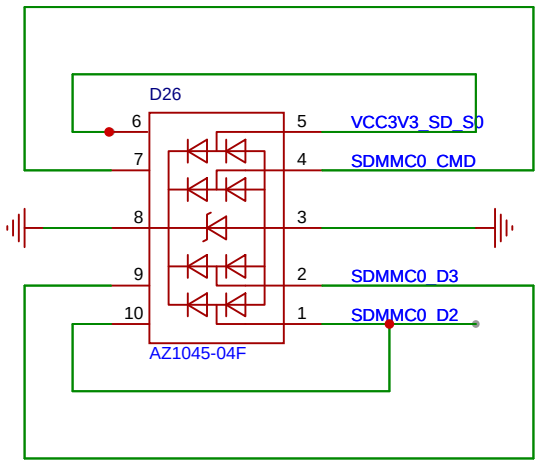

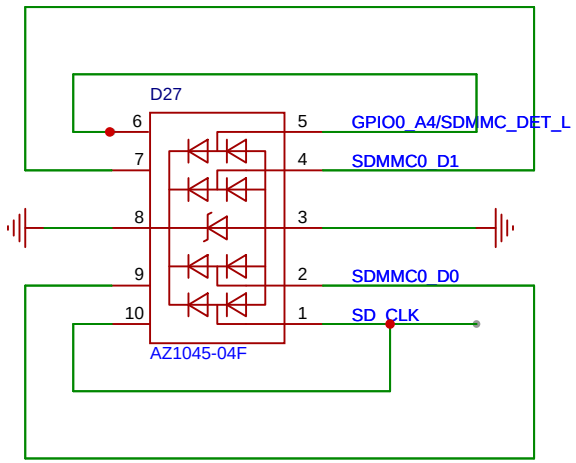

TF

Mipi CSI
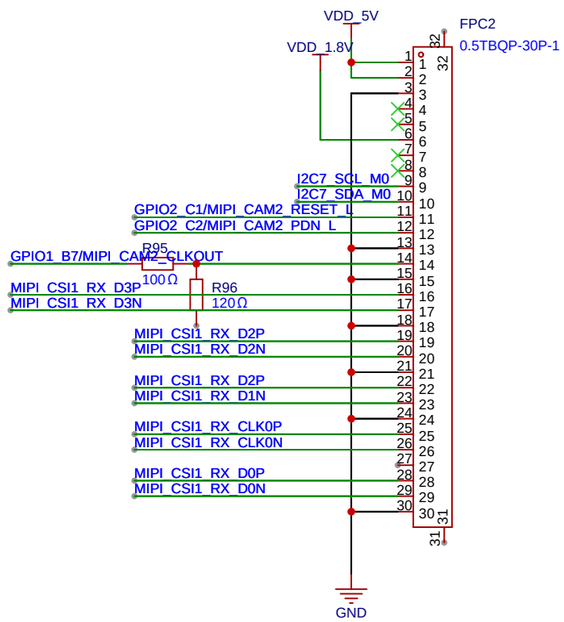
MIPI Camera
(MIPI_CSI_RX 4lanes)